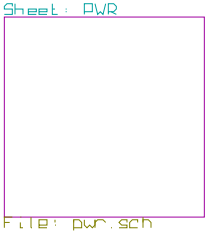

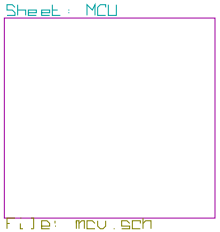

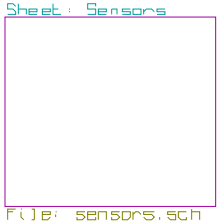

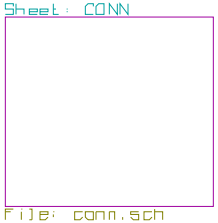

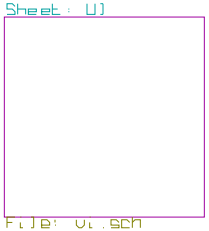

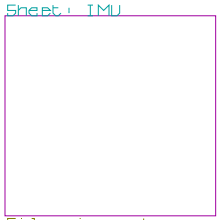

2009-11-28: Niklas Kannenberg <kannenberg@quadrofly.com> 2009-11-28: Kolja Mieh] <mieh]@quadrofly.com> Quadrofly.com		
File: qf_mainboard.sch Sheet: /		
Title: QF Mainboard		
Size: A4	Date: 4 dec 2009	Rev: 1
KiCad E.D.A. EESchema (20090216-final)		Id: 1/7

7..14 V Input from Battery
expected output current noted

Main Power Supply

max 2 A

MCU, Onboard Headers

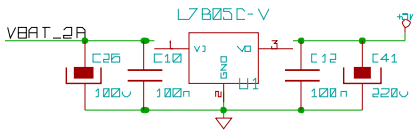

500 mA

Sensors, I2C Onboard Headers

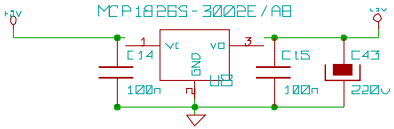

max 1A

AD Reference (MCU ADC, EPOT)

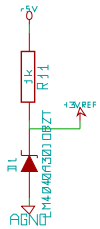

max 1 mA

Optional Servo Supply
(Otherwise fed via Speed Control)

max 5 A

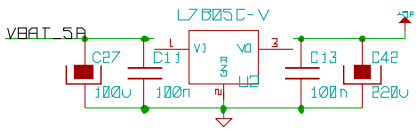

3..5 A

2009-11-20: Niklas Kannenberg <kannenberg@quadrofly.com> 2009-11-28: Kolja Mieh] <mieh]@quadrofly.com> Quadrofly.com		
File: pwr.sch		
Sheet: /PWR/		
Title: Power Supply		
Size: A4	Date: 4 dec 2009	Rev: 1
KiCad E.D.A. EESchema [200902216-final]		Id: 7/7

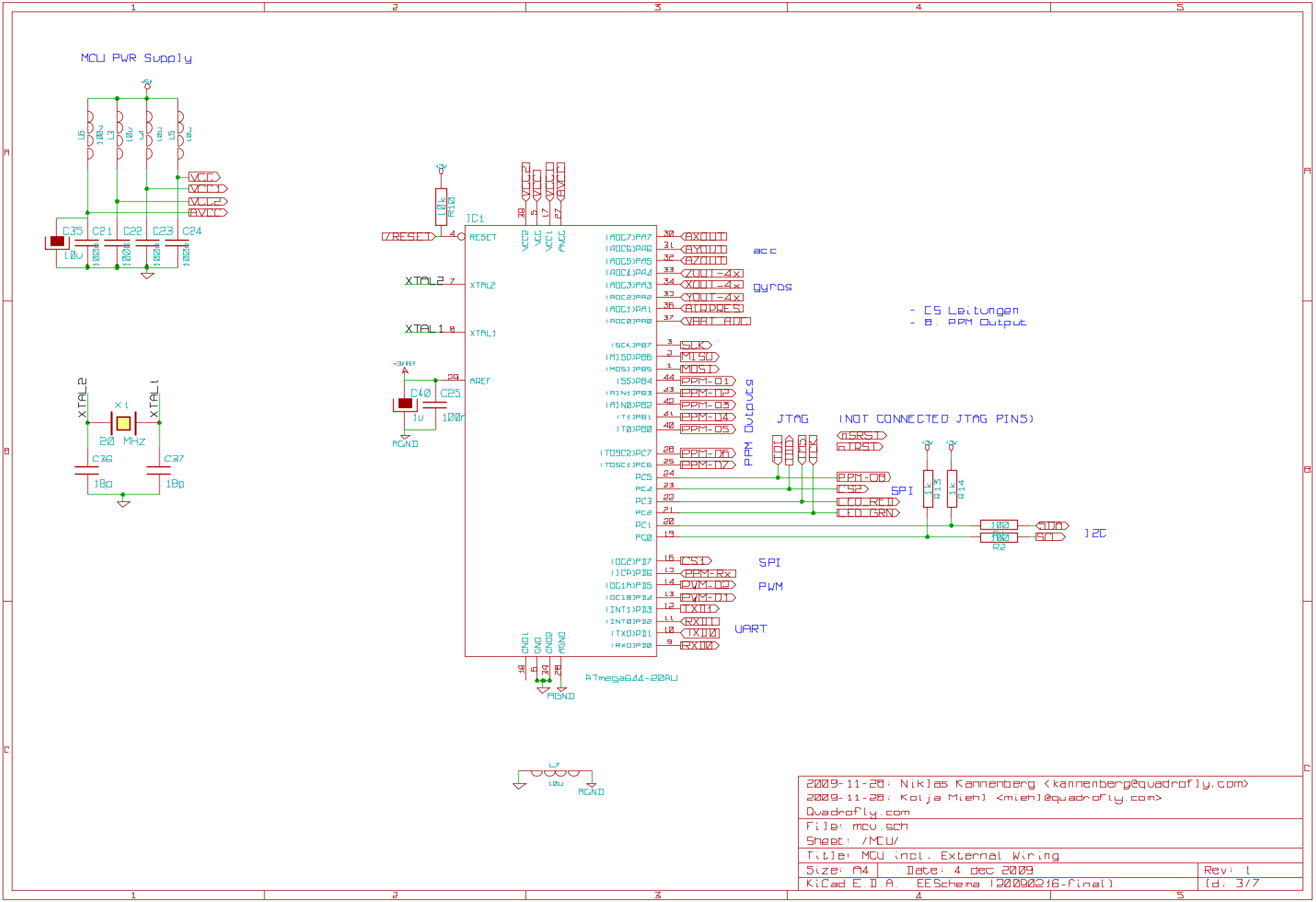
MCU PWR Supply
+5V
L6 100u
L3 10u
L4 10u
L5 10u
VCC
VCC1
VCC2
AVCC
C35 10u
C21 100n
C22 100n
C23 100n
C24 100n
XTAL2
XTAL1
X1
20 MHz
C36 18p
C37 18p
+3V
R10 10k
/RESET
IC1
RESET
XTAL2
XTAL1
AREF
C40 1u
C25 100n
AGND
VCC2
VCC
VCC1
AVCC
(ADC7)PA7
(ADC6)PA6
(ADC5)PA5
(ADC4)PA4
(ADC3)PA3
(ADC2)PA2
(ADC1)PA1
(ADC0)PA0
(SCK)PB7
(MISO)PB6
(MOSI)PB5
(SS)PB4
(AIN1)PB3
(AIN0)PB2
(T1)PB1
(T0)PB0
(TOSC2)PC7
(TOSC1)PC6
PC5
PC4
PC3
PC2
PC1
PC0
(OC2)PD7
(ICP)PD6
(OC1A)PD5
(OC1B)PD4
(INT1)PD3
(INT0)PD2
(TXD)PD1
(RXD)PD0
GND1
GND
GND2
AGND
ATmega644-20AU
AXOUT
AYOUT
AZOUT
ZOUT-4X
XOUT-4X
YOUT-4X
AIRPRES
VBAT_ADC
acc
gyros
SCK
MISO
MOSI
PPM-O1
PPM-O2
PPM-O3
PPM-O4
PPM-O5
PPM-O6
PPM-O7
PPM Outputs
JTAG
(NOT CONNECTED JTAG PINS)
nSRST
nTRST
TDI
TDO
TMS
TCK
PPM-OB
CS2
LED_RED
LED_GRN
SPI
R13 1k
R14 1k
100 R1
100 R2
SDA
SCL
I2C
CS1
PPM-RX
PWM-O2
PWM-O1
TXD1
RXD1
TXD0
RXD0
SPI
PWM
UART
L7 10u
AGND
- CS Leitungen
- 8. PPM Output
2009-11-28: Niklas Kannenberg <kannenberg@quadrofly.com>
2009-11-28: Kolja Miehl <miehl@quadrofly.com>
Quadrofly.com
File: mcu.sch
Sheet: /MCU/
Title: MCU incl. External Wiring
Size: A4
Date: 4 dec 2009
Rev: 1
KiCad E.D.A. EESchema (20090216-final)
Id: 3/7

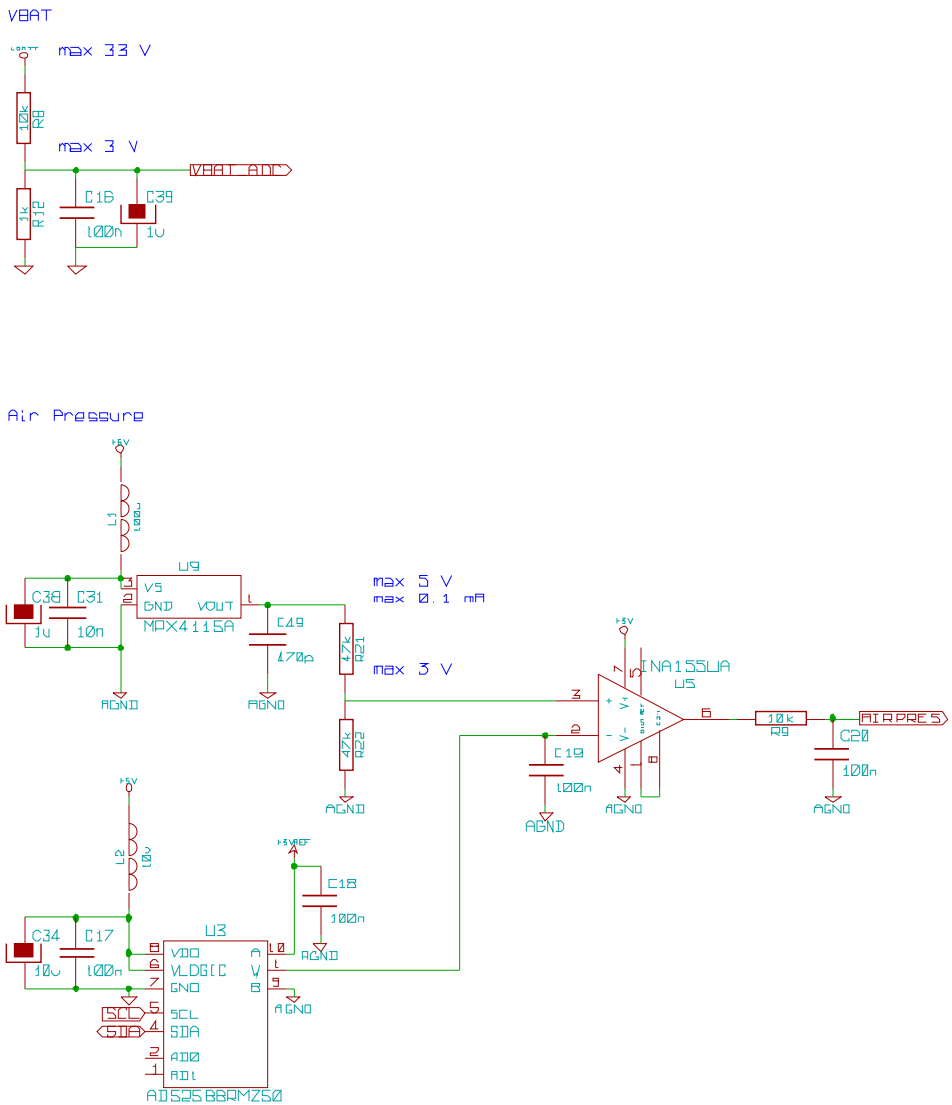

2009-11-20: Niklas Kannenberg <kannenberg@quadrofly.com> 2009-11-28: Kolja Mieh] <mieh]@quadrofly.com> Quadrofly.com		
File: sensors.sch Sheet: /Sensors/		
Title: Sensors		
Size: A4	Date: 4 dec 2009	Rev: 1
KiCad E.D.A. EESchema [200902216-final]		Id: 6/7

pitch and roll gyros

X, Y

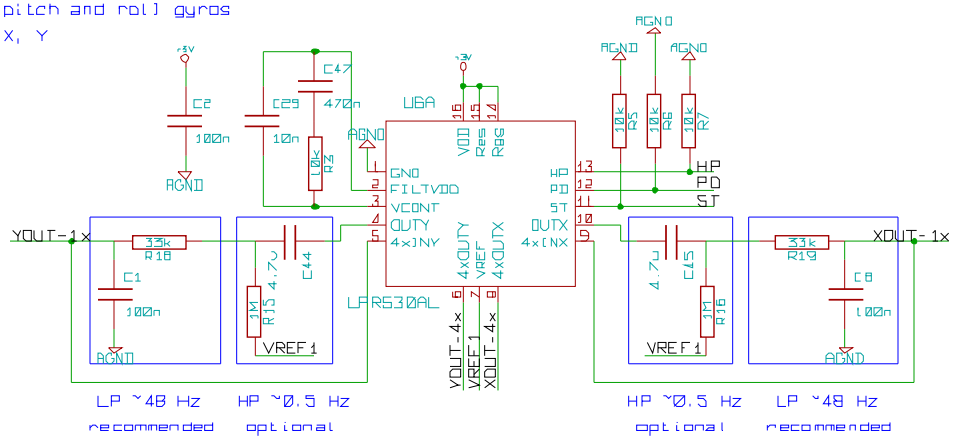

yaw gyro

Z

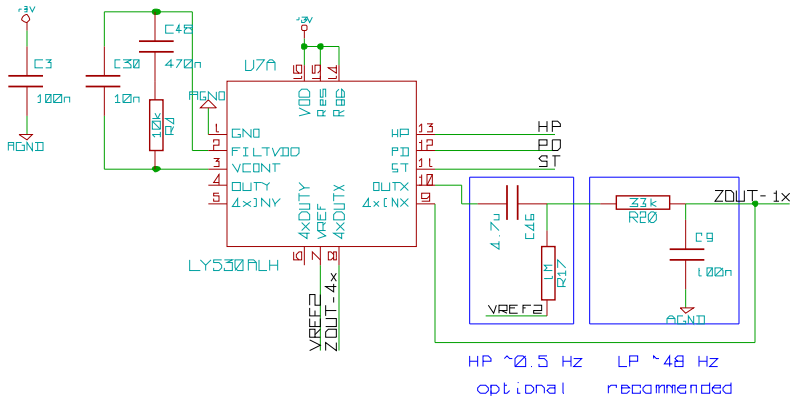

triple-axis accelerometer

X, Y, Z

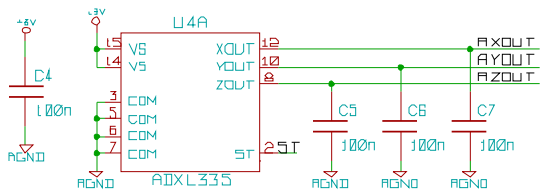

IMU Connection

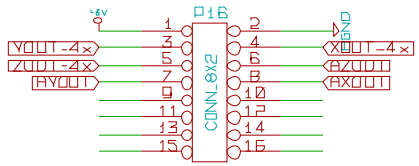

2009-11-28: Niklas Kannenberg <kannenberg@quadrofly.com>	
2009-11-28: Kolja Mieh] <mieh]@quadrofly.com>	
Quadrofly.com	
File: imu.sch	
Sheet: /IMU/	
Title: 6 DOF IMU	
Size: A4	Date: 4 dec 2009 — Rev: 1
KiCad E.D.A. EESchema [200902]6-final]	Id: 2/7

Battery Connector

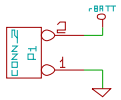

Extension Plug

PB3, PB2, PD5, PD4

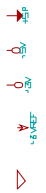

Was ist hiervon sinnvoll?

Bus Connections

ISP

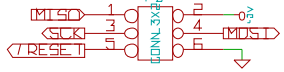

AVR JTAG

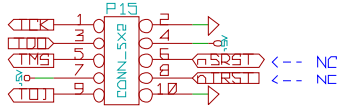

SPI

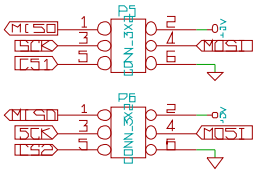

I2C

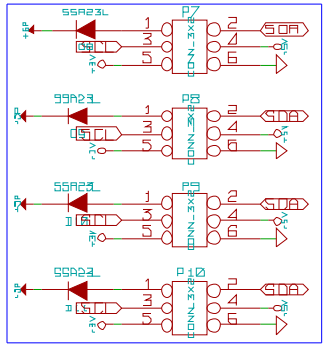

Speed Control

UART

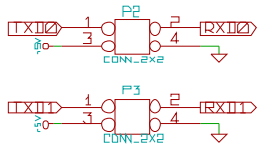

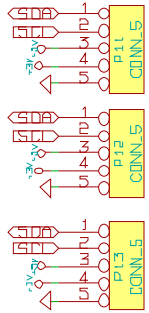

Sensors

optional

PPM I/O

PPM Input (Rx Signal)

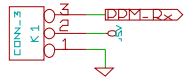

PPM Outputs

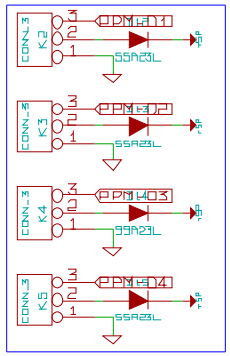

Speed Control

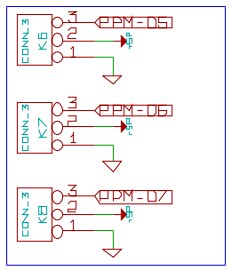

CAM Servos

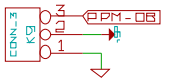

diodes are optional

2.54 mm pin headers

Avr Pin Convention:
Signals, 5 V, 3 V, GND

All connections are realized as On-Board Pin Headers in a row.

2009-11-28: Niklas Kannenberg <kannenberg@quadrofly.com>		
2009-11-28: Kolja Mieh] <mieh]@quadrofly.com>		
Quadrofly.com		
File: conn.sch		
Sheet: /CONN/		
Title: Connectivity		
Size: A4	Date: 4 dec 2009	Rev: 1
KiCad E.D.A. EESchema [200902]6-final]		Id: 5/7

Optional Power LEDs

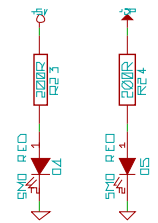

Status Indication

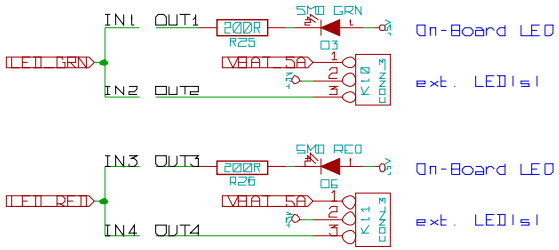

Switching Outputs

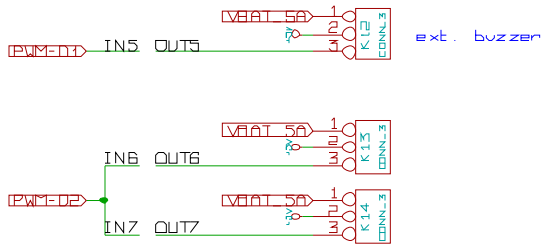

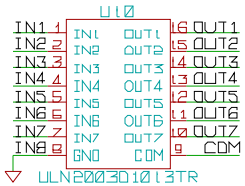

2009-11-28: Niklas Kannenberg <kannenberg@quadrofly.com> 2009-11-28: Kolja Miehl <miehl@quadrofly.com> Quadrofly.com		
File: UI.sch		
Sheet: /UI/		
Title: User Interface		
Size: A4	Date: 4 dec 2009	Rev: 1
KiCad E.D.A. EESchema (2009-02-16-final)		Id: 4/7